101

COPENHAGEN

Trumpet Table, Low - Calacatta

Designed by

Kristian Sofus Hansen &
Tommy Hyldahl

Trumpet Table, Low - Calacatta

Product Description

Inspired by 70's design, the Trumpet Table is designed in a trumpet shape with a soft curves and a circular tabletop. Trumpet is all about clean geometric shapes and embracing the beauty of natural materials.

The base in fibre concrete is topped with an exquisite Calacatta marble, emphasising the rich and beautiful patterns of the natural stone. The polished surface softly reflects the light, adding both warmth and depth to the Trumpet. The Trumpet makes a strong, fun presence in both residential and commercial spaces, for example in living rooms, bedrooms, offices, hotel suites, restaurants and bars.

Great as a stand alone table or combine the tall Trumpet table with the the Low Trumpet table for a harmonious composition.

For indoor use.

Designer Description

Tommy Hyldahl and Kristian Sofus Hansen intertwine their distinct sensibilities to create designs where storytelling, materiality, and timeless form meet in quiet harmony.

With a background in fashion, Tommy brings an intuitive eye for trends, colors, and textures. His process is one of layering histories, blending details and references from past design periods and reimagining them into something fresh and contemporary. Each collection unfolds as a narrative, evolving from concept to creation, with every element contributing to a greater story.

Kristian, who has lived and studied in Japan, seeks to unite Japanese aesthetics with Danish design, creating a characteristic twist on simplicity itself. His work is defined by the search for subtle, original details that elevate each piece with a unique signature. Drawing inspiration from art and sculpture, his creative process unfolds in new and exciting ways, always striving to craft designs that are both functional and timeless.

Together, they craft design that transcends time, poetic yet practical, expressive yet enduring.

Trumpet Table, Low - Calacatta

Main

SKU	247035
Product name	Trumpet Table, Low - Calacatta
Product Type	Coffee Table
Product Family	Trumpet
Color	Calacatta Violetta
Size	Low
Unit	Piece

Logistics

EAN number	4251501412335
Package height in cm	44.00
Package width in cm	53.00
Package length in cm	53.00
Suitable for Courier	Yes
Package - CBM	0.124
Package - Weight KG	13.000
Tariff Code No	9401790000
Country of origin	China
Quantity of Inner Boxes	1

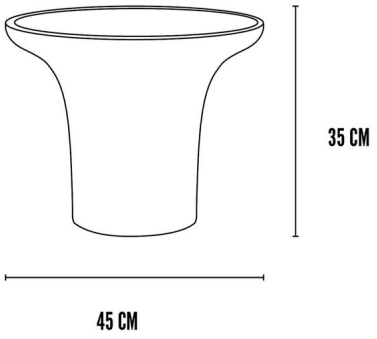

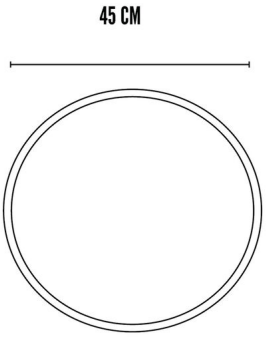

Trumpet Table, Low - Calacatta

Product

Materials	Calacatta Violetta & Fiber Concrete	Net weight in kg	11
Item Height in cm	35.00	Space Suitability	Indoor
Item width in cm	45.00	Strength Test	N/A
Item length in cm	45.00	FSC Wood	N/A

Upholstery

Fabric		Cigarette Test - CAL-117
Martindale	N/A	Cigarette Test - EN 1021-1
Colour Fastness to Light		Cigarette Test - BS5852 Part 1
Pilling		Match Flame Test - EN 1021-2
Oeko Tex		Ignition Source 5 (Crib 5) - BS 5852 Part 2
Fire Test Foam	N/A	NF P92-507 - Class M1

Family Description Text

The Trumpet Collection, born from the bold spirit of the 1970s, is a celebration of sculptural form and refined simplicity. It recalls an era when design embraced freedom, fluid lines, and fearless geometry. With its graceful curves and trumpet shaped silhouette, the collection resonates like a note held in suspension, a gesture of music translated into form. It channels the rhythm of jazz, the energy of modernist interiors, and the optimism of a time unafraid of statement and style.

Meticulously crafted through traditional techniques, the Trumpet Collection reveals itself in two expressions, each with its own soul. One is formed entirely from glass, a luminous sculpture that captures light as though it were sound, refracting it into warmth and depth, while the other is grounded, tactile, and architectural, with a sculptural base in hand painted fibre concrete crowned by a disc of natural stones. Together, these interpretations embody the essence of the Trumpet Collection: modern yet timeless, bold yet refined, simple yet expressive, a presence that draws the eye and shifts the energy of a room.

Color Description

Calacatta Violetta is a luminous marble defined by a soft white base enriched with flowing veins in violet, grey, and subtle beige. The interplay of cool and warm tones creates a balanced contrast, giving the colour both delicacy and strength. Refined yet expressive, Calacatta Violetta carries a timeless elegance that makes it equally suited for modern and classical settings.

Maintenance Guide Description

This piece combines the natural elegance of Calacatta Violetta marble with the sculptural strength of fiber concrete. Both materials are crafted to endure, yet each requires mindful care to preserve its beauty.

For Calacatta Violetta marble, dust regularly with a soft, dry cloth. Clean with a damp cloth and mild, pH-neutral soap, then dry thoroughly to avoid streaks or water spots. Because marble is porous, wipe spills immediately to prevent staining from liquids such as wine, coffee, or oils. Avoid acidic or abrasive cleaners, as these can etch or dull the polished surface. For lasting protection, professional sealing is recommended.

For fiber concrete, wipe with a soft, dry or slightly damp cloth. Use mild, pH-neutral soap when necessary, and dry immediately. Avoid abrasive pads, harsh chemicals, or acidic/alkaline cleaners, which may damage the finish. Protect surfaces with coasters, mats, or felt pads to prevent scratches, stains, and heat marks.

With consistent, thoughtful care, the refined luxury of marble and the resilience of fiber concrete will retain their contrast and harmony, ensuring the furniture ages gracefully while maintaining its sculptural presence.

Materials Description

This material pairing unites the natural drama of Calacatta Violetta marble with the sculptural strength of fiber concrete. Calacatta Violetta, prized for its creamy ground streaked with violet veining, carries the elegance of centuries of geological formation. Each slab is unique, with flowing patterns that bring depth, movement, and individuality.

In contrast, fiber concrete offers stability and resilience. Reinforced with fibers and cast in molds, it allows for bold sculptural forms while remaining lightweight and durable. When combined, the refined luxury of marble and the grounded strength of concrete create a dialogue between organic beauty and architectural precision.

The result is a material composition that is both expressive and enduring timeless stone anchored by crafted concrete designed to enrich furniture with contrast, balance, and sculptural presence.